CQ7 + INVERTER COMPATIBILITY LIST

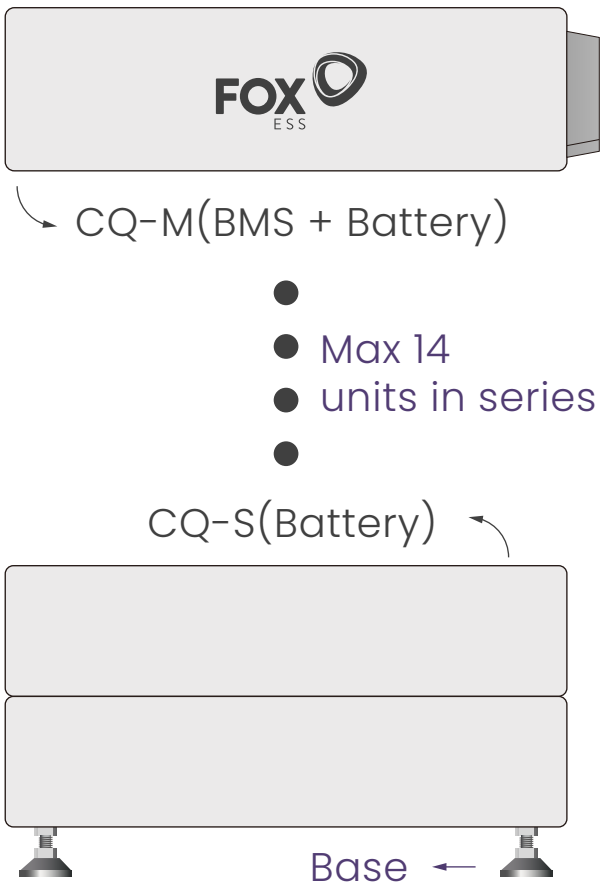

- Foolproof plug-and-play connection, system setup in 30 minutes.
- IP65 rating for outdoor use, resistant to harsh weather.
- Built-in fire protection module, ensuring safety and reliability
- Built-in heating function for reliable winter operation.
- Modular design for flexible capacity expansion.
- Compatible with all FOX inverters, from residential to commercial use.
- Premium $LiFePO_4$ cells and full aluminum die-cast housing for superior safety and reliability.

Series	CQ7 (Battery Qty Min.-Max.)	Inverter	
Single Phase System	[1CQ-M+1CQ-S] - [1CQ-M+6CQ-S]	H1	
	[1CQ-M+1CQ-S] - [1CQ-M+6CQ-S]	KH	
Three Phase System	[1CQ-M+1CQ-S] - [1CQ-M+11CQ-S]	H3 SMART H3-M	P3-S
	[1CQ-M+3CQ-S] - [2CQ-M+22CQ-S]	H3 PRO	P3 PRO
	[1CQ-M+3CQ-S] - [3CQ-M+39CQ-S]	H3 Plus	P3 Plus

* H3 SMART/H3 PRO/H3 Plus version is applicable to: Australia | Austria | Germany | Italy | Switzerland | UK
* P3-S/P3 PRO/P3 Plus version is applicable to: Some other markets not covered by H3 SMART/H3 PRO/H3 Plus

CQ7 + SINGLE PHASE SYSTEM

H1

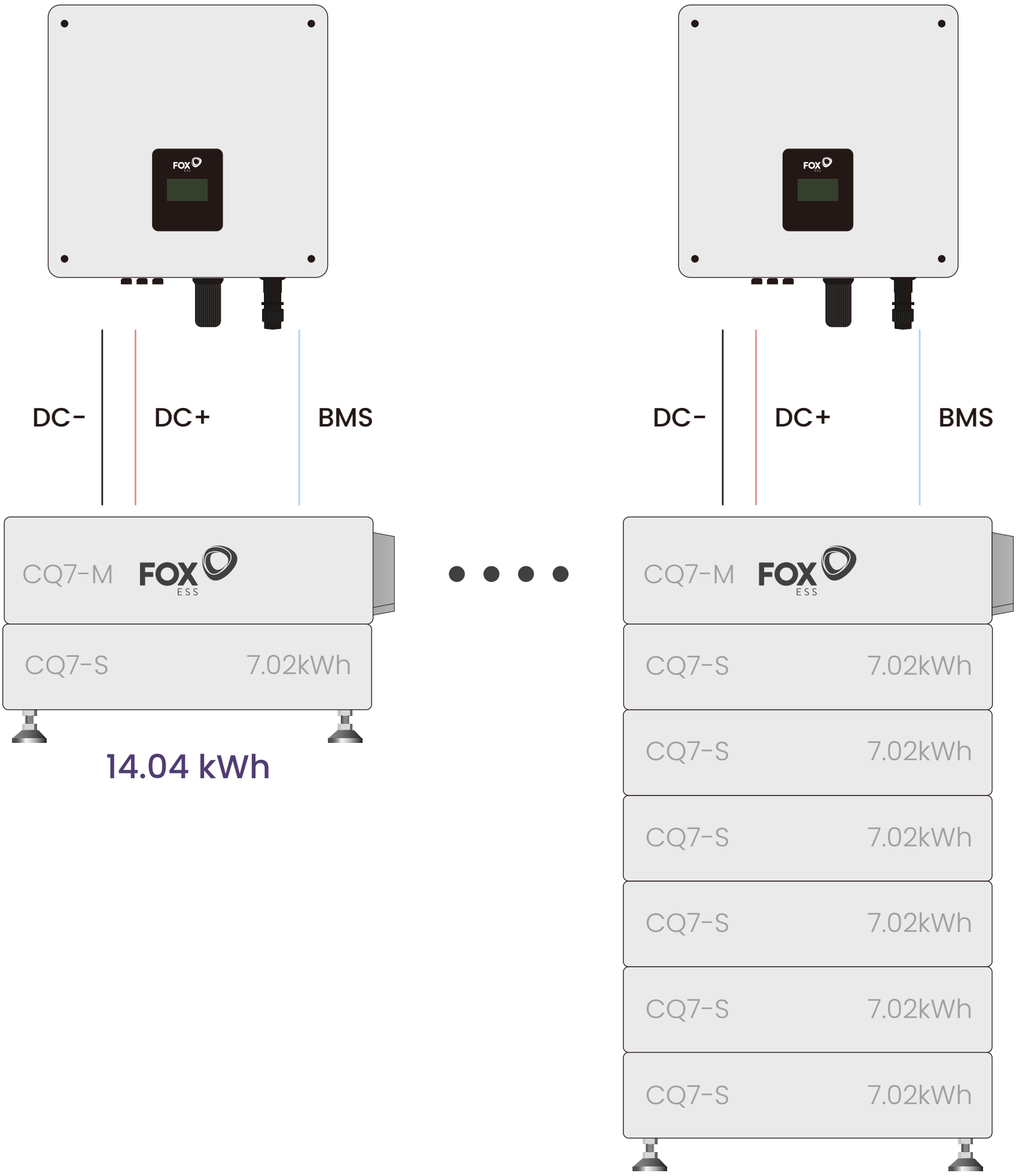

CQ7 + SINGLE PHASE SYSTEM

KH

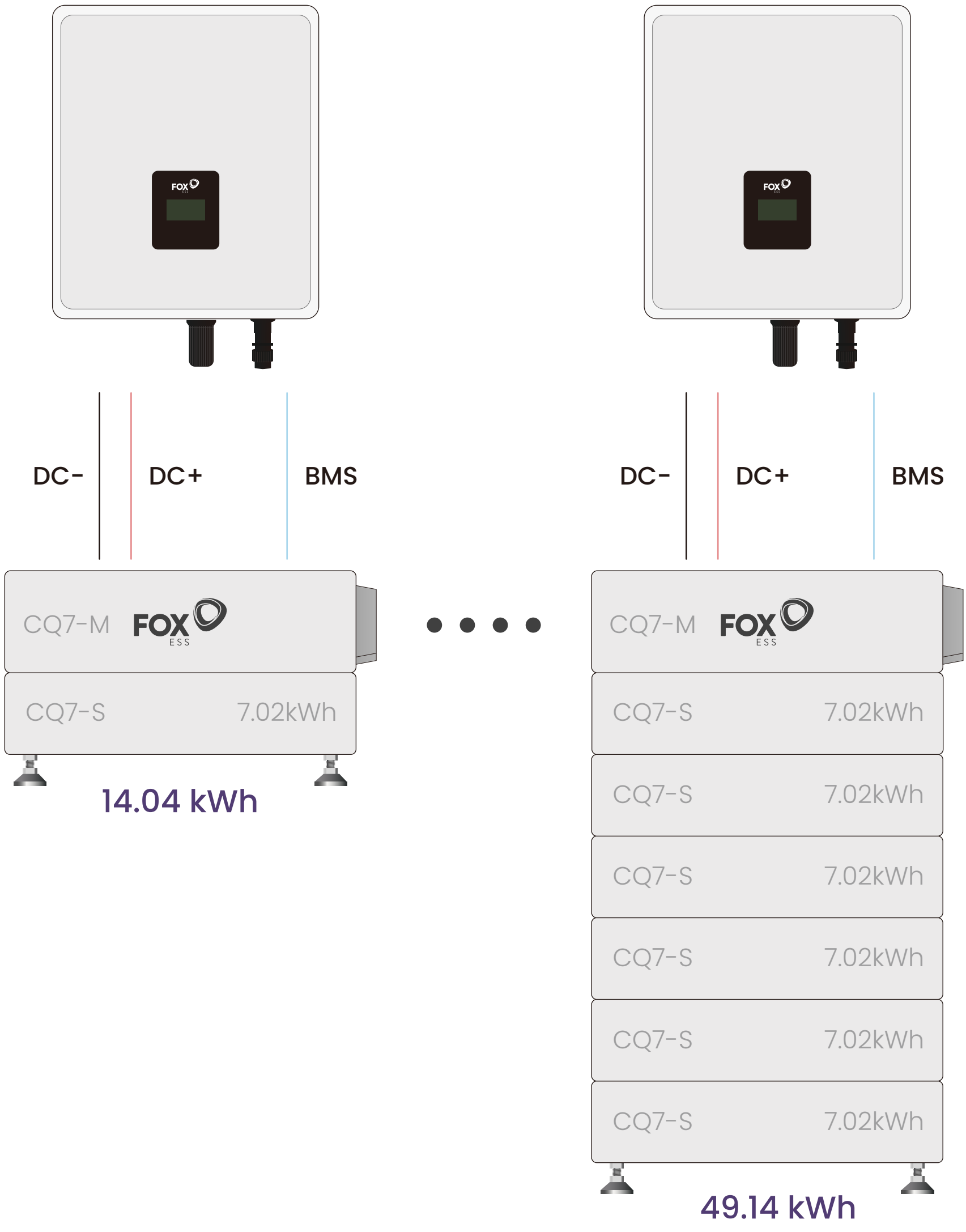

CQ7 + THREE PHASE SYSTEM

H3 SMART / H3-M
P3-S

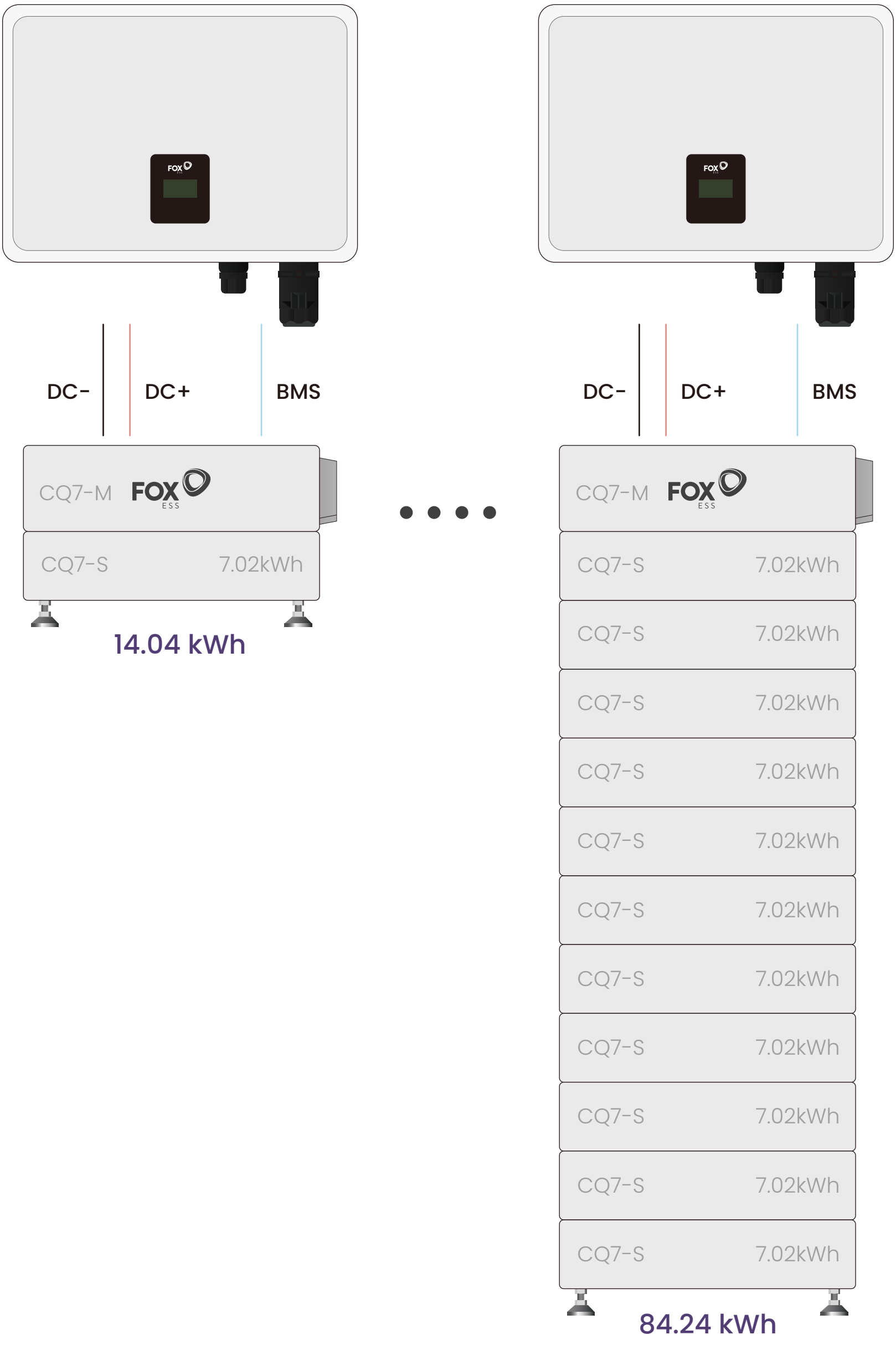

CQ7 + THREE PHASE SYSTEM

H3 PRO
P3 PRO

Battery connection method 1

H3 Pro / P3 Pro has 2 independent battery inputs.
Single battery cluster connection, power limit: 17kW !

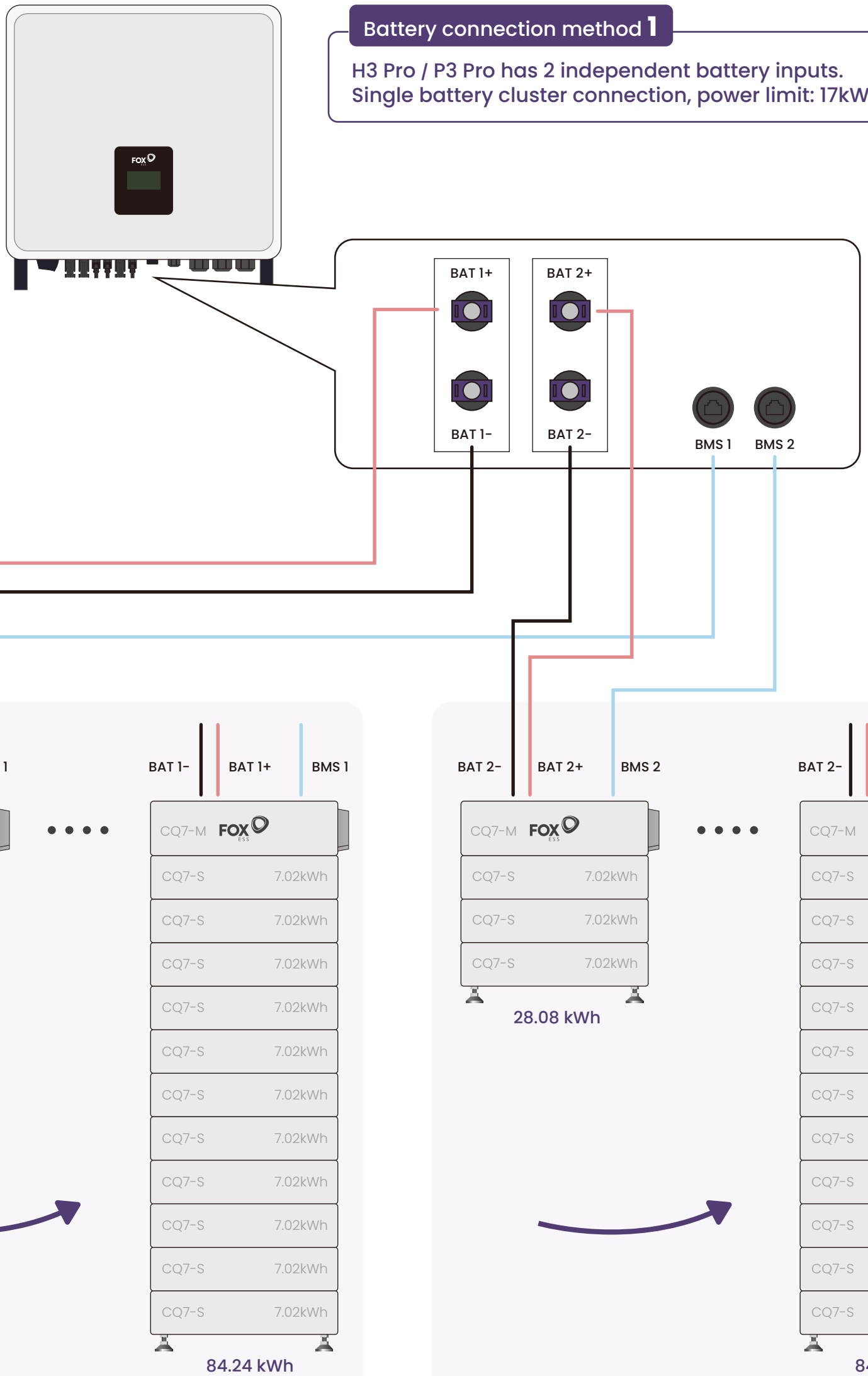

Note

BMS 1(CQ-M 01): MIN 4 units to MAX 12 units.

Note

BMS 2(CQ-M 02): MIN 4 units to MAX 12 units.

CQ7 + THREE PHASE SYSTEM

H3 PRO
P3 PRO

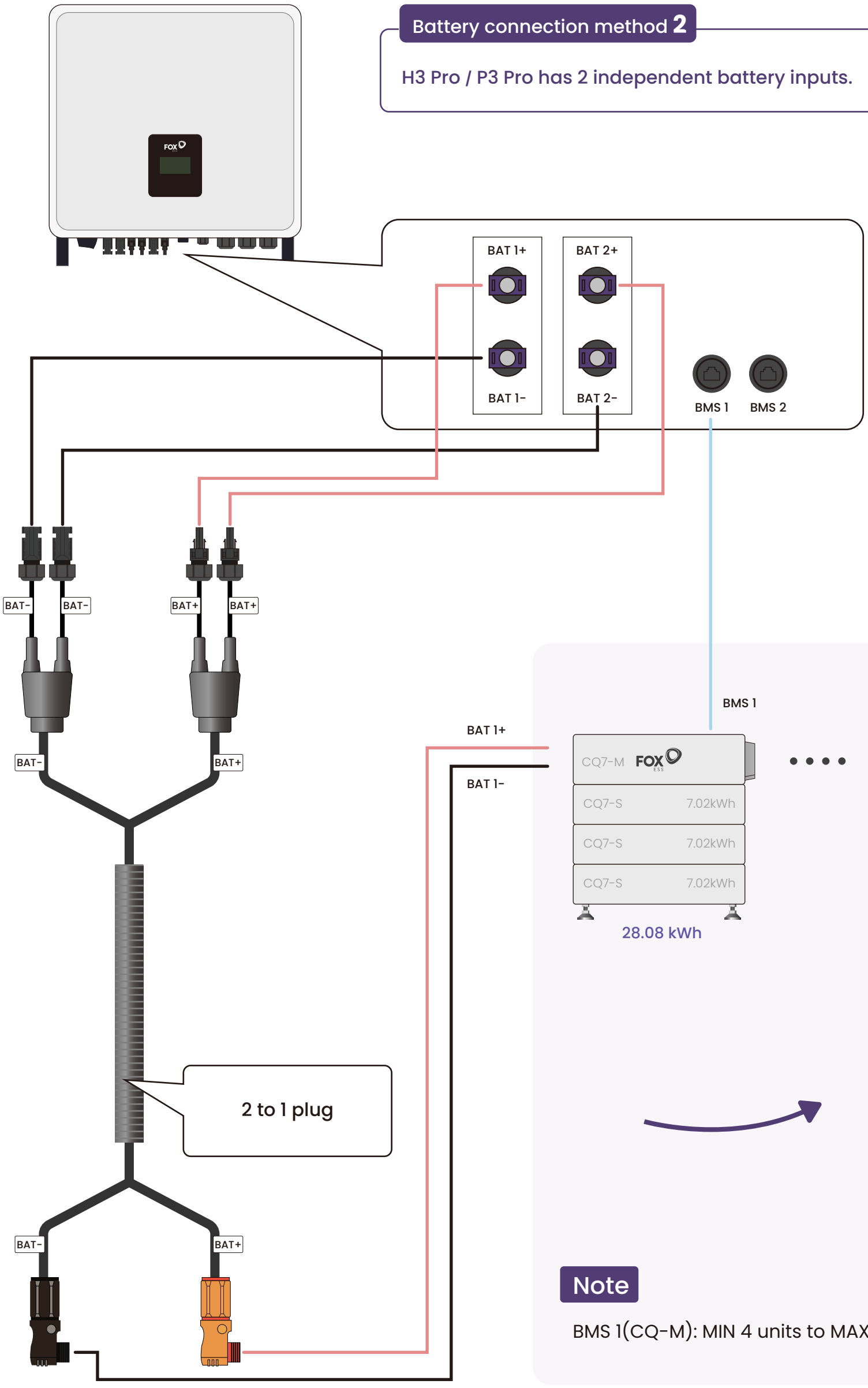

Battery connection method 2

H3 Pro / P3 Pro has 2 independent battery inputs.

Note

BMS 1(CQ-M): MIN 4 units to MAX 12 units.

CQ7 + THREE PHASE SYSTEM

H3 PLUS
P3 PLUS

H3 Plus / P3 Plus has 3 independent battery inputs !

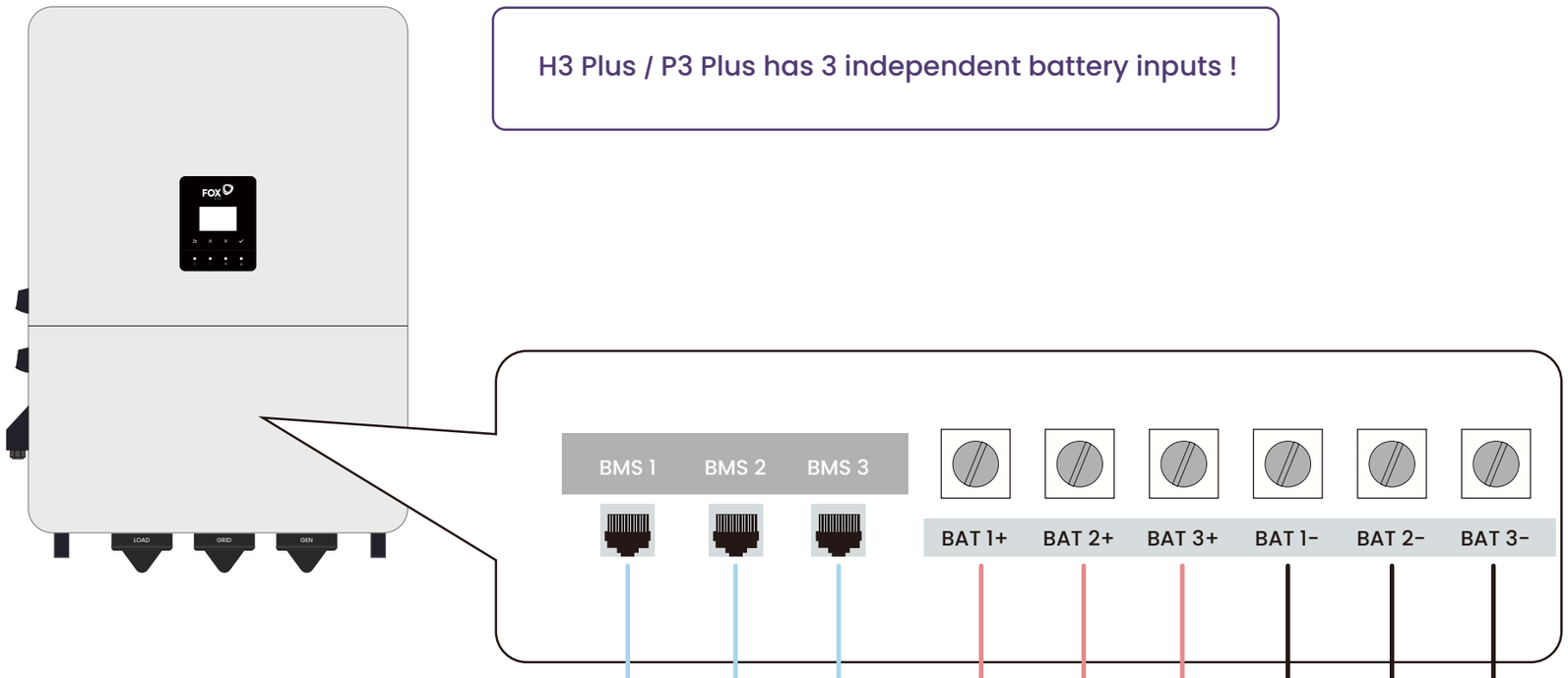

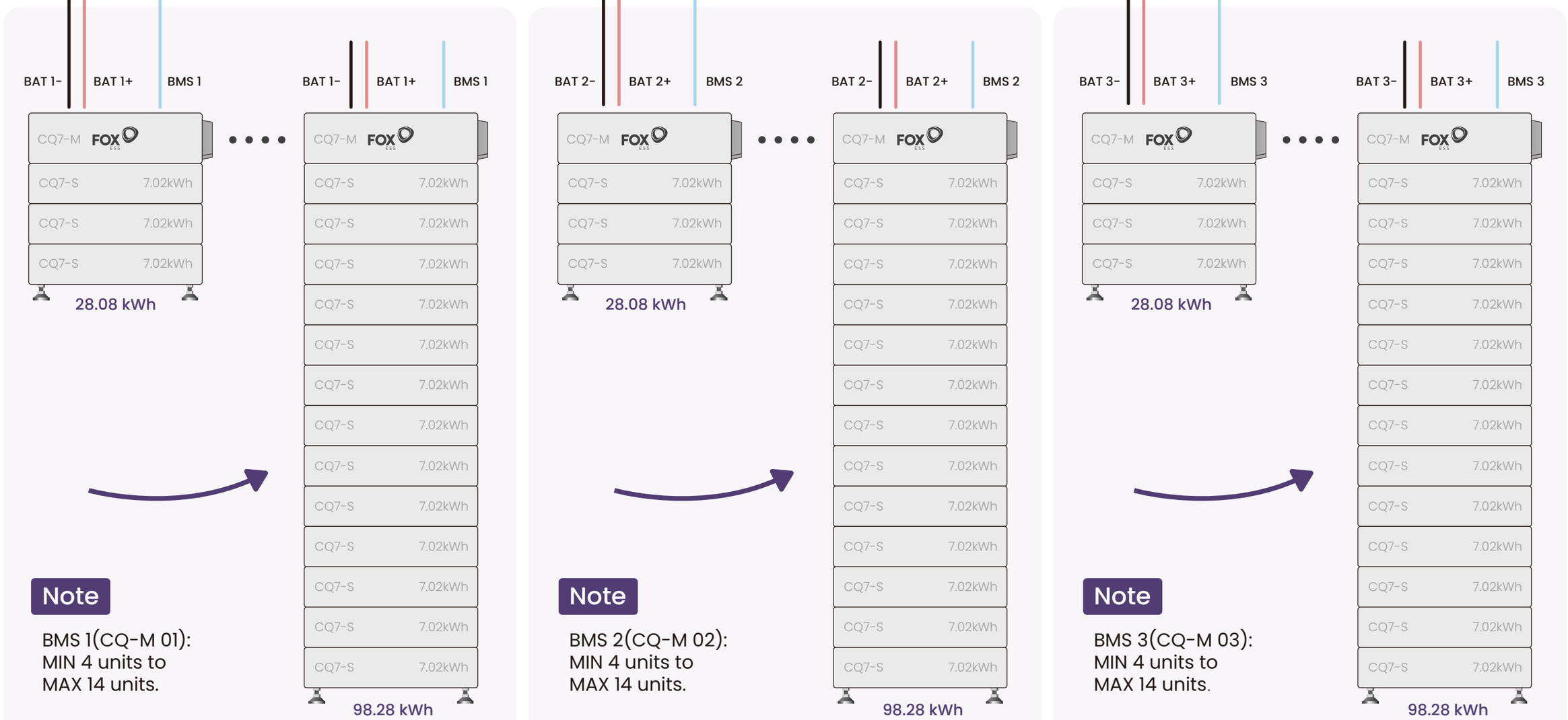

Note

BMS 1(CQ-M 01):
MIN 4 units to
MAX 14 units.

Note

BMS 2(CQ-M 02):
MIN 4 units to
MAX 14 units.

Note

BMS 3(CQ-M 03):
MIN 4 units to
MAX 14 units.

01 Cluster

02 Cluster

03 Cluster